Rock Mechanics and Rock Engineering: From the Past to the Future – Ulusay et al. (Eds)
© 2016 Taylor & Francis Group, London, ISBN 978-1-138-03265-1

Critical comparison between the double-convex and flat radial joints features in segmental tunnel lining

R. Osgoui, A. Poli & M. Pescara
GEODATA Engineering SpA, Turin, Italy

ABSTRACT: More recently, the demand for application of segmental tunnel lining has been raised for both long & deep tunnel in rock and shallow tunnel in soft ground, particularly in urban areas. From technical and economical points of view, a proper dimensioning of the segmental lining has always attracted the interest of many designers in the field of tunneling. This paper will focus on a critical comparison between the double-convex and flat joints of radial joints of a segmental lining in terms of induced bearing and splitting stresses in concrete and finally the steel ratio to be used to satisfy the structural verifications in Ultimate and Serviceability States. The results of this study have revealed that the contact length of a convex joint shape is independent from geometrical load eccentricity whereas the contact length of a flat joint decrease considerably due to load eccentricity. Therefore, for a given condition, the ultimate resistance of concrete against bursting force (in compression) for a convex joint is higher than that for a flat joint. However, splitting tensile stresses in concrete of radial joints are higher in double convex joints; consequently, a more steel ratio is needed for the double convex radial joint configuration. In practice, double convex may allow for reduced segmental lining thickness, while flat joints, generally, requires a lower steel reinforcement. Taking into consideration of above-mentioned critical comparison and technical-economical requirements of a given project, a more practical radial joint feature might be chosen.

1 INTRODUCTION

The idea of application of double-convex radial joint, instead of flat radial joint, in designing segmental tunnel lining could be attributed to the need for the optimization of the deduced bearing stresses in concrete segment since it exceeds, in most cases, the allowable bearing compressive strength of concrete in long term state. The definition of radial (longitudinal) joint is presented in Figure 1.

Such a higher rate of bearing stress could be accredited to the reduction of the effective contact width on the radial joint which often takes place for the flat radial joint shape in most shield-tunnel cases in soft ground condition where the combination of the axial force-flexural moment causes a considerable effect of "joint birdsmouthing" often on the radial flat joint.

The invention of double-convex joint helps keeping the radial joint contact width unchanged even after joint rotation and possible joint off-set, considerably reducing, even eliminating the effect of joint birdsmouthing.

Although there have been a number of valuable simplified or complex approaches for design of segmental lining, none of these provides a technical justification to the criteria considered for the design of a suitable shape of radial joint in segment. This gap is more evident referring to the available design guidelines and codes for segmental tunnel lining (AFTES 1993, ITA 2000, JSCE 2006, DAUB 2013, BTS 2010).

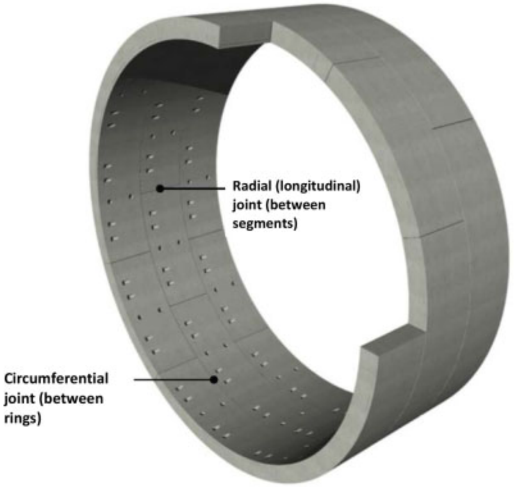

Figure 1. Definition of joints in a segmental tunnel ring (Groeneweg 2007).

Hence, it is of paramount importance to the design engineer of the segmental lining, who is liable for dimensioning segmental lining for both geometric and strength-durability stand points, to consider the most suitable shape for radial joint as long as the instructions provided in project design specifications is in agreement.

This paper is, therefore, indented to help design engineer reviewing and understanding in depth the advantages and disadvantages of both flat and double-convex types of radial joints from technical point of view and provide them with design criteria to choose the most appropriate solution, taking into account even the economical aspects.

2 FEATURES OF THE LONGITUDINAL (RADIAL) JOINTS IN SEGMENTS

The ground and water load, which act on segmental lining, is transferred on radial joints between segments. Such loads bring about the tensile stress within segments causing bursting and splitting in both circumferential and transversal directions. The bursting tensile splitting reinforcements should be properly quantified and arranged to act against tensile splitting stresses in circumferential and transversal directions.

Regardless of type of radial joint shape, the quantity of such reinforcements should be determined such that all necessary structural verifications in ultimate state are satisfied.

Radial joints are either designed as curved or flat. Curved joints were developed to overcome the problems of flat joints in specific conditions and to optimize the performance of radial joints.

Although curved joints reduce eccentricity and improve articulation, flat joints sustain a higher load at failure, assuming the flat joints are in full contact (Woods 2003). However with joint rotation the maximum sustainable load for flat joints reduces rapidly but rotation has little impact on the capacity of curved joints.

2.1 *Radial joint rotation*

When subjected to the ground and water load, the segmental ring is ovalized (a deformed form of a circular ring being shorter diameter at vertical and longer diameter at horizontal axes). Due to the shape of the rhomboidal and trapezoidal segment shapes the segmental ring ovalization will solely be limited to deformation due to ground loading.

The occurrence radial joint ovalization causes the joint rotation. The joint rotation has a very significant impact on the joint performance in such a way that the rotation gives rise to the geometry eccentricity in addition to the resulting load eccentricities; finally, leading to the birdsmouthing of the joint.

Hence, the design of joint must consider the effect of the eccentricities created in the longitudinal joint due to rotation.

2.1.1 *Mechanism of radial joint Birdsmouthing*

When a jointed segmental tunnel lining is subjected to the ground/water load, it results in ring ovalization due to deflection / distortion of the ring. Such ring deflection/distortion is manifested at the adjacent segment joints giving rise to radial joint rotation because of presence of load eccentricities at radial joint. The rotation of radial joint in presence of eccentricities can lead to possible joint opening or so-called “joint birdsmouthing”. This phenomenon is likely to take place if the acting bending moment on radial joint exceeds the critical bending moment $M_{critical}$ (the limit in which the joint is fully under compression) obtained by means of middle-third rule (Hearn, 2000):

$$M_{critical} = \frac{N \cdot h}{6} \tag{1}$$

where N and h are the acting normal force and the effective contact length of the radial flat joint, respectively.

The occurrence of birdsmouthing has a very significant impact on the feature of the bearing stress in concrete segment. The greater the joint birdsmouthing, the higher bearing stress in segment. To reduce the effect of the joint birdsmouthing, the double-convex joint could be substituted for flat joint.

The simple way for the determination of joint rotation “α” is that of applying geometrical relations (as presented in Fig. 2), commonly used in design stage. However, the more precise and sophisticated ways are the application of analytical formulations. i.e those of Janβen Joint Model (1983) or to apply a 3D numerical model, but it is very complex and time-consuming.

It should be noted that applying simplified 2D numerical analysis for a jointed segmental ring (for example by means of a PLAXIS or FLAC models), the flexural rigidity (EI) of the circular ring is assumed to be uniform throughout the lining ring, but taking into account the reduction of rigidity due to the presence of joints and the increment of bending moment in the joint area by presenting an effective ratio for the bending rigidity (η). Thus in a simplified approach, the segmental ring is treated as uniform, but less rigid. i.e. solid ring with equivalent rigidity (Osgoui & Pescara 2014).

2.2 *Radial flat joint*

The radial flat joint is the ordinary shape of joint and it is used for a common joint design. Unless otherwise instructed, this type of radial joint must be considered during geometric design of a segment. This kind of radial joint is often accompanied with guiding rod allowing the segment to be guided into its position during the assembly stage and it functions as a shear pin. Further, the radial flat joint can be even tightened by means of straight steel bolts. A scheme of a typical radial flat joint is shown in Figure 3.

The long-term ground and water loads acting on the segmental lining are transmitted into the segments by means of mainly radial joints and partially circumferential joints (JSCE, 2006; Osgoui & Pescara, 2014). The distribution of such a load on radial flat joint is best described in Figure 4. To calculate the effective and re-assigned contact areas of a radial flat joint, it is essential that the load eccentricities (M_k/N_k) be known as given in details in Figure 4.

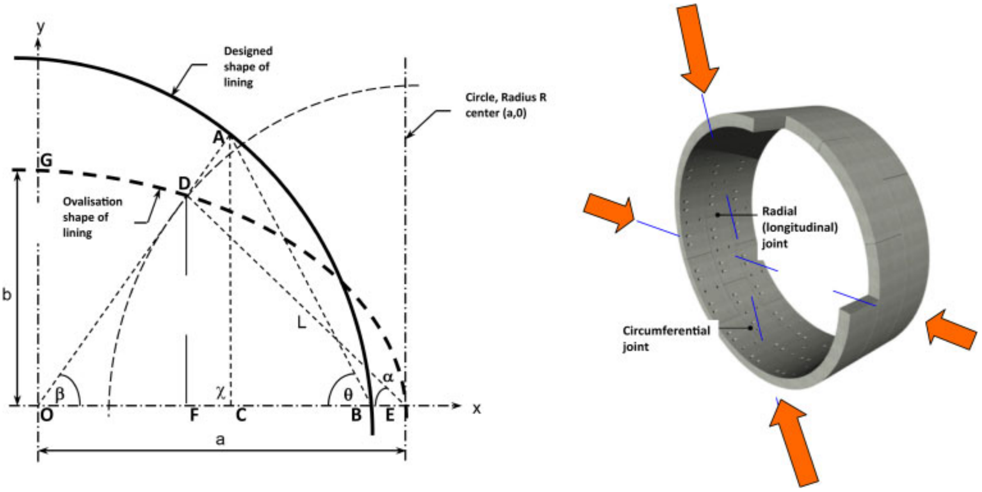

Figure 2. Geometric model for joint birdsmoothing on account of segmental ring ovalization resulting from the acting long-term ground-water loads.

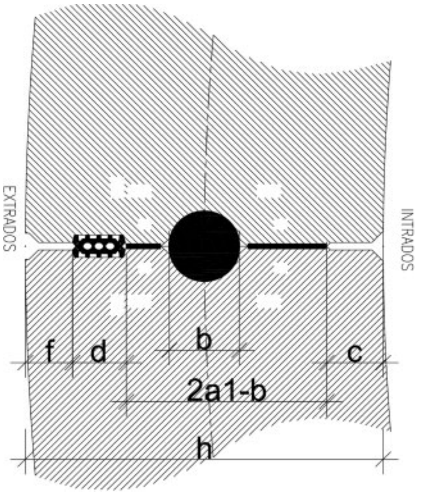

Figure 3. Geometry of a radial flat joint.

Just as the effective contact width is considerably influenced by the amount of the eccentricity, so is the compressive bearing capacity of the flat joint. Hence, in some worse load combinations, the possibility that flat joint shape would not be an applicable solution is high. In this case, the solution of double-convex joint would be thought. In the next sections we will see the details of design solution for flat joint.

2.3 *Double-convex joint*

This solution, in contrast, should be applied when either the design prescription obligates to use such a joint shape or the design engineer acknowledges for such a joint shape, having evaluated the primary results in terms of the remarkable extent of the compressive bearing stress and load eccentricity on the radial joint.

The geometry of a double-convex joint is shown in Figure 5.

The design of radial convex joint must consider the effects of stress concentrations created within the radial joints. For double convex joints the bearing stresses "$\sigma_{c\max}$" and joint contact width "a_c" must be calculated.

One of the main advantages of the convex-convex radial joint is that load is transferred through the middle third of the segment, eliminating stress concentrations on either the intrados or extrados.

Another main advantage is that joint rotation is approximately half of the amount that occurs with a flat joint and the equal joint effective contact area before and after joint rotation, considerably reducing birdsmoothing.

In theory the compressive bearing width is a function of the elastic modulus of the concrete; the width of bearing "a_c" for contact between two convex surfaces can be calculated using the classical theory of elasticity (Timoshenko & Goodier, 1970):

$$a_c = 4\sqrt{NRk} \tag{2}$$

where N = axial (hoop) force on radial joint, R = radius of convex joint, k = elastic constant

$$k = \frac{1-\nu^2}{E\pi} \tag{3}$$

where N = axial (hoop) force on radial joint, R = radius of convex joint, k = elastic constant, E = elastic modulus of the concrete in long term condition ($\sim E/2$), ν = Poisson's ratio of concrete.

The bearing width should then be used to check both compressive bearing and bursting tensile stresses.

The maximum bearing compressive stress "$\sigma_{c\max}$" can be obtained by:

$$\sigma_{c\max} = \sqrt{\frac{NE}{\pi R(1-\nu^2)}} \tag{4}$$

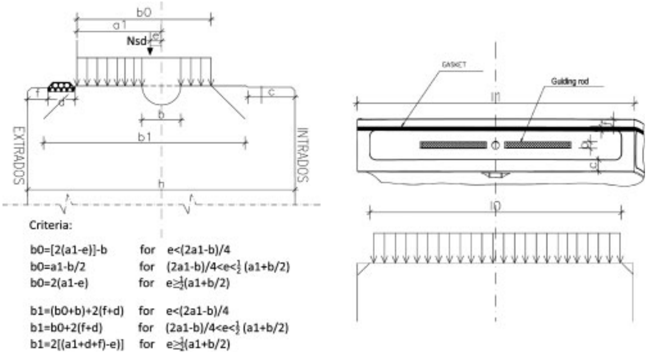

Figure 4. Distribution of load on radial flat joint and the calculation of initially effective and re-assigned contact lengths, considering load eccentricity and geometrical relations (left: radial direction, right: circumferential direction).

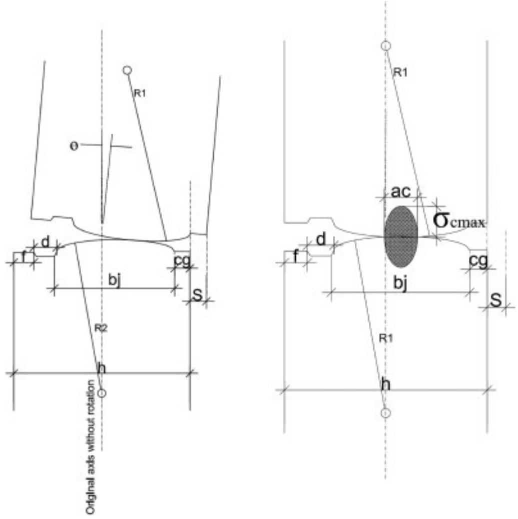

Figure 5. Double-convex radial joint. Left: Geometry of double-convex radial joint. Right: Load contact length (ac) and stress concentration zone deduced on double-convex radial joint.

And the criterion for verification is:

$$\sigma_{c\max} \leq 2f_{ck} \tag{5}$$

which is considered as the first verification for the double-convex joint. In case of problem in this verification, one should increase the class of concrete and/or the segment thickness or switch to flat joint design. However, the latter case is very rare to happen.

In the next sections, we will show how to calculate the bursting tensile stresses for both radial fat and double-convex joints.

For both features of radial joints, double convex and flat joint, the method of Iyengar (1962) or Leonharddt (1977), based on theory of elastic, might be used to estimate the peak transverse tensile stress and the magnitude of the tensile splitting for concentrated forces acting on a prismatic member.

In contact zones between the two adjacent segments at longitudinal (radial) joints, the verification due to contact compression pressure and bursting (splitting) force induced by axial loads should be performed.

3 COMPARISON BETWEEN DOUBLE-CONVEX AND FLAT JOINT

3.1 *Bearing and tensile splitting stresses in segment*

Irrespective of shape of the radial joint (flat vs double-convex), the following method might be used for the design of the radial joint.

This calculation method relies on two separate analyses. The first analysis is to determine the ultimate bearing capacity of the concrete in compression and the second is to calculate the tensile splitting stress by means of one of the practical methods such as analytical approach (based on theory of elasticity, Iyangar 1962 and Leonhardt 1977), numerical models by means of existing suitable software (based on both elastic theorem and plastic analysis in modeling the post-peak behavior of the concrete after crack propagation). Nevertheless, during design stage and considering the time limitation, the complexity of the numerical modeling, the usage of the analytical elastic solutions gives also reliable and realistic results.

3.1.1 *Bearing compressive stress due to actions of longitudinal (radial) joint*

The criteria to be respected in this verification is based on the fact that the compressive force deduced in segment normal to the radial joint axis (N_{sd}) should be lower than that resistant ULS capacity of the concrete under compression action (F_{rdu}) and ultimate load capacity of the concrete (F_{max}) (EN 1992-1-1:2004), point 6.7 reference to punctual loads:

$$N_{sd} \leq F_{rdu} \leq F_{\max} \tag{6}$$

where

$$N_{sd} = l \times N_k \times \gamma_f \tag{7}$$

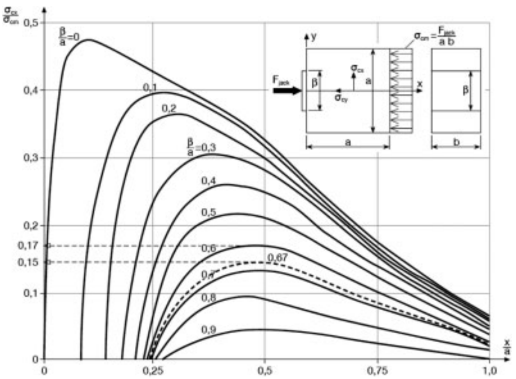

Figure 6. Bursting tensile splitting stress diagram of Iyengar, 1962 Normograph for the determination of locations of the maximum and minimum splitting tensile stress inside the segment under axial thrusting force (Iyangar 1962).

$$F_{rdu} = A_{C0} \cdot f_{cd} \cdot \sqrt{\frac{A_{cl}}{A_{c0}}} \tag{8}$$

$$F_{\max} = 3.0 \times f_{cd} \times A_{c0} \tag{9}$$

where l is the width of the segment, N_k is the normal force acting on radial (longitudinal) joint surface calculated by means of either analytical or numerical methods, and γ_f is the load factor in accordance with the used codes, A_{c0} is the effective contact area of the radial joint, A_{c1} is the re-distributed surface area below radial joint face, and f_{cd} is the long-term design compressive strength of the concrete.

3.1.2 *Bursting tensile splitting stresses*

In order to calculate the bursting-tensile splitting stresses resulting from the action of radial joint, the theory of the concentrated force, based on elasticity solution, is used. The useful bursting tensile splitting stress diagram suggested by Iyengar (1962) is simply used to calculate the bursting tensile stress (Figure 6).

Having been calculated the bursting tensile splitting stress "Z", the quantity of the required reinforcements for both circumferential and transversal directions are simply obtained. In this solution, it is assumed not considering any contribution of the concrete in terms of its tensile splitting strength (f_{ctd}) and all tensile splitting capacity should be withstood through tensile splitting capacity of the reinforcements. The bursting tensile splitting force can be obtained:

$$Z = 0.25 N_{sd} \left(1 - \frac{l_0, b_0}{l_1, b_1} \right) \tag{10}$$

where l_0 and l_1 are the effective contact and re-distributed lengths of the radial joint on circumferential (tangential) direction , respectively while b_0 and b_1 are the effective contact and redistributed heights of the radial joint in transversal (radial) direction.

Table 1. The geometric parameters of radial joints considered for comparison.

Radial Joint geometric parameters	Double-convex joint	Flat joint
f [mm]	32	32
d [mm]	33	33
b [mm]	–	30
2a1 [mm]	–	110
c [mm]	–	70
bj [mm]	145	–
cg [mm]	65	–
ac [mm]	50	–

The tensile splitting reinforcements provide the total steel capacity of:

$$Z = A_{st} \cdot f_{yd} \tag{11}$$

where f_{yd} is the yield strength of the steel reinforcement.

3.2 *Worked example*

In order to evaluate the structural performance of radial joint under permanent load condition (ground and water loads) a comparison between the double-convex joint with flat shape one was carried out for a worked example.

Considering that a shallow tunnel in urban area, to be excavated by means of a TBM and to be lined through segmental lining, has an internal radius of 6.17 m. Each segmental ring is comprised of 3 ordinary segments, 2 counter-key segments, and one key-stone that forms an universal ring of configuration 5 + 1. Each segment has thickness and of 27.5 cm and length of 1.5 m. The class of concrete to be considered is C60/75 (Eurocode) providing a cylindrical compressive strength of $f_{ck} = 60$ MPa while the steel characteristics of the reinforcements to be applied are $f_{yk} = 500$ MPa and 200 MPa for ULS and SLS, respectively.

The total acting ground and water loads on segmental lining and radial joints have the magnitude of the axial normal force $N_k = 1880$ kN/m and the flexural moment $M_k = 24.3$ kN.m/m, which could be obtained by means of one of the suitable methods (Osgoui & Pescara 2014)

The radial joint parameters of both double-convex and flat joints considered in this example are well presented in Table 1, referring to Figure 3, 4 and 5.

3.2.1 *Steel ratio*

In terms of tensile splitting reinforcements in radial direction, the results of the calculations indicate that a higher rate of steel is required for the double-convex radial joint. The steel rates for double-convex and flat joints have been obtained 28.7 cm^2 and 22.45 cm^2, respectively and should be taken into consideration with respect to the economical point of view of the project.

Table 2. Critical comparison between the double-convex and flat radial joints types.

Longitudinal (radial) joint type	Advantages	Disadvantages
Flat joint	• Presence of grove and spring offers a good guidance for the installation and improve the possibility of the transferring transverse forces • Lower rate of splitting reinforcement along radial joint • Recommend application for the ground that results minor joint rotation and consequent minor eccentricities in resulting solicitations in lining	• Risk of joint rotation • Risk of birdsmouthing due to high possibility of joint rotation • Considerable decrease in joint contact area after joint rotation and occurring eccentricity • Higher bursting stress due to increasing of birdsmouthing and load eccentricities • Risk of insufficient concrete compressive bearing capacity • More risk of segment damage • Need for higher concrete class in presence of eccentricities
Convex-convex joint	• Joint rotation is approximately half of the amount that occurs with a conventional flat joint, considerably reducing birdsmouthing • Load transfer through the middle third of the segment, eliminating stress concentrations on either the intrados or extrados • Lower bursting stress due to reduction of birdsmouthing • Constant joint contact area even after joint rotation • Possibility in application of lower concrete class • No need for guiding rod • Independent from load eccentricities	• Insufficient sealing possibility, but it can be integrated with double-sealing system • Need for higher splitting reinforcement along radial joint • Requiring extremely high tolerances steel moulds for casting the segments • Difficulty in providing segment moulds • Need always for bolt system to connect the adjacent segments in a ring

On the other hand, the steel ratios to be replaced at tangential direction were identical for both flat and double-convex radial joint as calculated 7.0 cm^2.

3.2.2 *Concrete class and segment thickness*

The concrete class and segment thickness play major roles in verification for compressive strength (bearing capacity) when the radial joints of contiguous segments are in fully contact and under ground-water load action.

In terms of the double-convex radial joint, using Equation 4 brings about a maximum bearing compressive stress "$\sigma_{c\,\max}$" of 57.0 MPa with is much lower than admissible bearing capacity of the concrete "$2f_{ck}$". As far as the flat radial joint is concerned, applying Equations 7, 8, 9 results in:

$$N_{sd} = 2822\,kN, F_{rdu} = 7000\,kN, F_{\max} = 11324\,kN$$

which also satisfies the required verification.

It is interesting, at this point, to note that in view of the fact that the value of F_{rdu} is dramatically decreased as the amount of contact area is reduced due to the effect of the eccentricities; consequently, the bearing capacity verification fails. In this case either the application of a higher concrete class or thicker segment is the practical solution, pessimistically impacting on the cost of the tunnel lining.

On the contrary, thanks to the independency of the compressive stress of eccentricity in double- convex radial joint, hence either a lower concrete class or thinner segment is required to satisfy the structural verification. This point should also be taken into consideration from economical point of view.

4 CONCLUSIONS

The key conclusions extracted from this on-going study as regards the critical comparison between the double-convex and flat radial joints types are well presented in Table 2.

REFERENCES

AFTES. 1993. Les Joints d'étanchéité entre voussoirs. *Tunnels et Ouvrages Souterrains*, 155 164–166.

DAUB (German Tunnelling Committee) Working Group "Lining Segment Design" 2013. Recommendations for the Design, Production, and Installation of Segmental Rings.

European Standard EN 1992-1-1. 2004. Eurocode 2: Design of Concrete Structures: Part 1-1: General Rules and Rules for Buildings. European Committee for Standardization.

Groeneweg, T. W 2007. Shield Driven Tunnels in Ultra High Strength Concrete: Reduction of the Tunnel Lining

Thickness. *MSc Thesis in Civil Engineering*, Delft University of Technology, The Netherlands.

Guglielmetti, V. Grasso.P, Mahtab, A and Xu, S. 2007. *Mechanized Tunnelling in Urban Areas- design methodology and construction control*. Taylor & Francis Group.

Hearn E. J. 2000. *Mechanics of Materials I An Introduction to the Mechanics of Elastic and Plastic Deformation of Solids and Structural Materials*. 3rd Edition. Butterworth-Heinemann.

International Tunnelling Association (ITA). 2000. Guidelines for the design of shielded tunnel lining. Working group 2. *Tunnelling and Underground Space Technology*. 15 (3): 303–331.

Iyengar, K.T. 1962. Two-dimensional theories of anchorage zone stresses in post-tensioned beams. *Journal of the American Concrete Institute* (ACI). 59(10), 1443–1466.

Janßen, P. 1983. Load capacity of segment joints. *Ph.D. dissertation*, Braunschweigh University of technology.

Japan Society of Civil Engineers (JSCE). 2006. *Standard Specifications for Tunnelling: Shield Tunnels*, Tokyo.

Leonhardt, F. 1977. *Calcolo di progetto & tecniche costruttive*. Vol II. Edizioni tecniche ET Milano.

Maidl, B, Herrenknecht.M, Maidl.U, Wehrmeyer.G. 2012. *Mechanized Shield Tunnelling* 2nd Edition. Ernst & Sohn. Berlin.

Osgoui, R & Pescara, M. 2014. An integrated design approach for the design of segmental tunnel lining in an EPB-Shield driven tunnel-A case study in Iran: Ahwaz Metro Project. *Proceedings of the World Tunnel Congress– Tunnels for a better Life*. Foz do Iguaçu, Brazil.

Specification for Tunnelling. 2010. The British Tunnelling Society (BTS) and The Institution of Civil Engineers. Thomas Telford. 3rd Edition.

Timoshenko, S.P & Goodier, J.N. 1970. *Theory of elasticity*. Tokyo : McGraw-Hill Kogakusha Ltd, - Engineering societies monographs, 567.

Woods, E. 2003. Design decisions for CTRL 2's bored tunnels. *Tunnels & Tunnelling international* supplement September 2003.